USA / Canada - Non-Detachable Power Plug, Medical-Grade

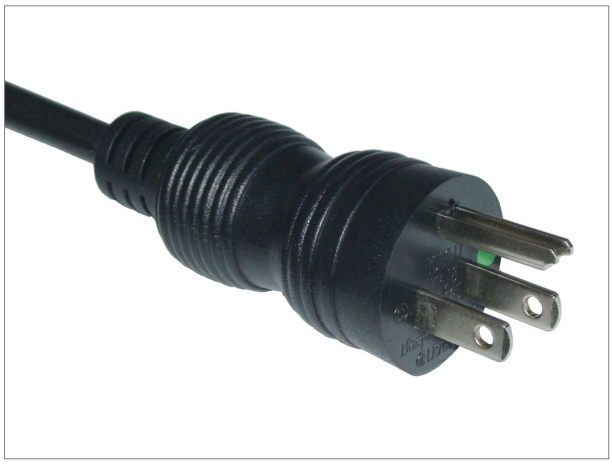

Catalog No. : YP-18

Standard : NEMA 5-15P (Hospital Grade)
Ratings : 15A, 125V AC
Applications : For Class I Equipment

U.S.A. / Canada

LISTED

Available with Cords:

SJT 18/3	SJTW 18/3
SJT 16/3	SJTW 16/3
SJT 14/3	SJTW 14/3

Cordage Type	Jacket Material	Conductor Size (mm²)	No. of Cond.	Insulation Material	Stranding (pcs/mm)	Insulation (mm) Thickness	Jacket (mm) Thickness / O.D.	Temp. Ratings
SJT 18/3	PVC	0.823	3	PVC	41 / 0.160	0.76	0.76 / 7.9	60, 105°C
SJT 16/3	PVC	1.31	3	PVC	26 / 0.254	0.76	0.76 / 8.5	60, 105°C
SJT 14/3	PVC	2.08	3	PVC	41 / 0.254	0.76	0.76 / 9.3	60, 105°C
SJTW 18/3	PVC	0.823	3	PVC	41 / 0.160	0.76	0.76 / 7.9	60, 105°C
SJTW 16/3	PVC	1.31	3	PVC	26 / 0.254	0.76	0.76 / 8.5	60, 105°C
SJTW 14/3	PVC	2.08	3	PVC	41 / 0.254	0.76	0.76 / 9.3	60, 105°C

Dimensional Data:

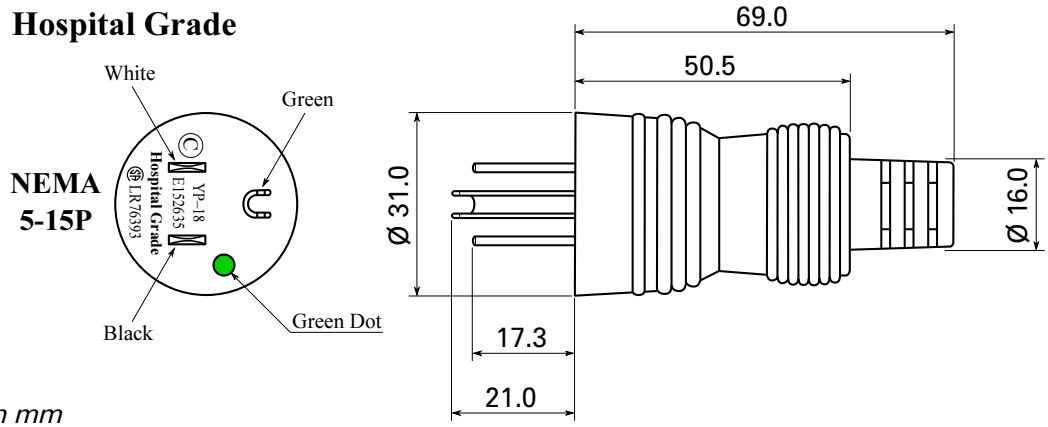

Dimensions in mm