Eplosion-Proof Electronic Siren

Model SSTX-MV

DESIGNED FOR USE IN EXPLOSION-PROOF ENVIRONMENTS

- Produces one of three tones – wail, yelp and horn
- Multi-voltage design – accepts 24VDC, 120VAC or 240VAC
- Produces 108dB @ 10' (118dB @ 1m)
- UL Listed, cUL listed
- NEMA 3R, IP44 enclosure

Federal Signal's SSTX-MV is an explosion-proof electronic siren capable of producing one of three high decibel tones from the same unit. The circuitry is contained in a rugged die-cast aluminum amplifier housing.

The Model SSTX-MV features internal amplification and tone circuitry capable of reproducing one of three different tones. The user selects from the wail, yelp or horn tone by reconfiguring the internal jumpers.

This unit operates on 24VDC, 120VAC or 240VAC. It is capable of producing up to 108dB @ 10 feet (118dB @ 1m).

This electronic siren is UL (Underwriters Laboratories) and cUL Listed for Class I, Division 1, Groups B, C & D.

The Model SSTX-MV can be used as a stand-alone, full output, audible warning device in any explosion-proof environment where voice paging is not required.

Typical uses include emergency warning, start and dismissal, fire alarm, general alarm and evacuation.

Federal Signal's Model SSTX-MV Explosion-Proof Electronic Siren is an economical multi-tone siren that is designed to hold up to the rigors of explosive and corrosive environments.

Model	Voltage	Operating Current
SSTX-MV	24VDC	600mA
SSTX-MV	120VAC	210mA
SSTX-MV	240VAC	120mA

Tone	Decibels @ 10'	Decibels @ 1m
Wail	108	118
Yelp	108	118
Horn	101	111

EXPLOSION-PROOF ELECTRONIC SIREN (SSTX-MV)

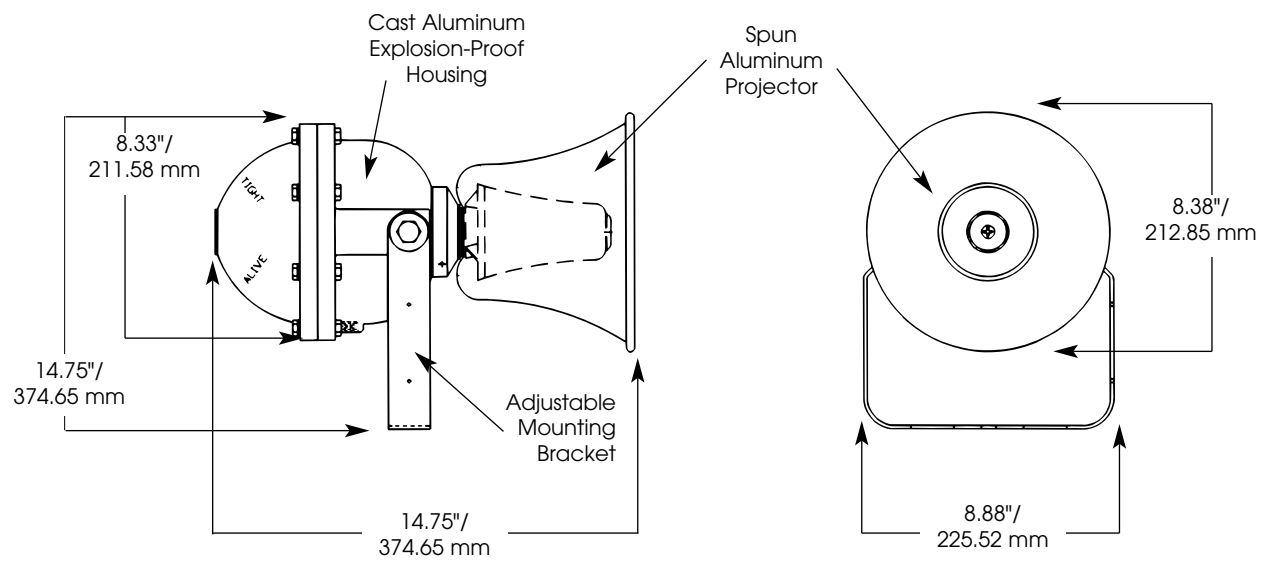

SPECIFICATIONS

Operating Temperature:	-31°F to 161°F	-35°C to 72°C
Net Weight:	18 lbs.	8.2 kg
Shipping Weight:	19 lbs.	8.6 kg
Height:	14.75"	375 mm
Width:	8.88"	226 mm
Depth:	14.75"	375 mm

HOW TO ORDER

- Specify model number

REPLACEMENT PARTS

Description	***Part Number***
Power Plant Assembly	K2001177C
Connector, 4-Position	K140340B